EN

# MAX TRAILER

05.2016

## PREMIUM QUALITY AS STANDARD

MAX Trailer is powered by FAYMONVILLE TRAILERS TO THE MAX

www.maxtrailer.eu

# Premium quality as standard!

***MAX** Trailer* is a completely *innovative concept* in the sector of semi-trailer- and trailer construction.

*Standardized components* and an accordingly coordinated manufacturing process make it possible to produce an absolutely *high-quality* product.

This quality is based on the *technical know-how* and the *long-standing experience* of Faymonville, which the brand ***MAX** Trailer* is part of.

Since the market introduction in 2012, the dealer network has been enlarged continuously. From the beginning, ***MAX** Trailer* experienced rapid growth in the transportation industry.

# MAX100/110

| | |
|---|---|
| Axles | 2-3-4-5-6 |
| Suspension | pneumatic |
| Steering | fix, friction steered, hydraulic steering |
| Width | 2.540 mm |
| Total length | 16.500 mm, with truck 4x2, 6x2, 6x4 |

- SAF axles
- Standard options
- Axle distance 1.360 mm
- Tyres 17.5"
- Fifth wheel height loaded: 1.150-1.350 mm

## Technical data

→ SAF-axles with drum brake, pneumatic suspension with lifting/lowering valve

→ Axle tools

→ Tyre 235/75 R17.5 according to choice of the manufacturer

→ Braking system following EU-regulations with EBS-E (4S3M) system, without connection to the truck

→ Electric system conform to the EU-regulations lighting 24 volt ASPÖCK-NORDIK (ASS3)

→ ASPÖCK-UNIBOX on the galvanized front connection ledge with socket 24N, 24S & 15 pole. Connection to the ISO norm

→ Top quality and long-lived protection against corrosion of the welded frame (standard steel grid blasted) guaranteed by
-a 2 components of 2K zinc rich epoxy primer
-a high quality 2 components 2K direct to metal top coat

→ Rear end metalized and painted in RAL 9010 (Reinweiss)

→ One galvanized steel headboard, height ± 400 mm. One spare wheel with holder on the headboard

→ King pin 2"

→ 2 wheel chocks with carrier on the headboard

→ Landing gears JOST (mechanic) with 2 speeds, lifting capacity 24t (50t proof load)

→ Galvanised landing gears at the rear under the loading platform

→ On the right and left side under the gooseneck and at the rear of the trailer one holder for the warning boards and socket

→ Holder for one beacon light at the rear of the trailer

→ Reflectors (red or yellow) according to the EU regulation at the rear

→ Yellow reflective tape according to the EU regulation over the entire length, on the extension and at the rear

→ A mud flap

## MAX100-N-2A-8.60

L = 8600 mm GL = 11200 mm

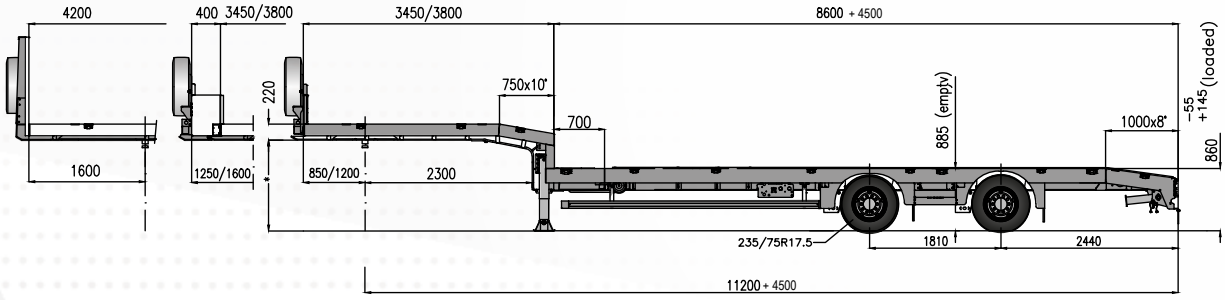


## MAX100-N-3-8.60-U

L = 8600 mm GL = 11200 mm

## MAX100-N-3-9.30-U

L = 9300 mm GL = 11900 mm

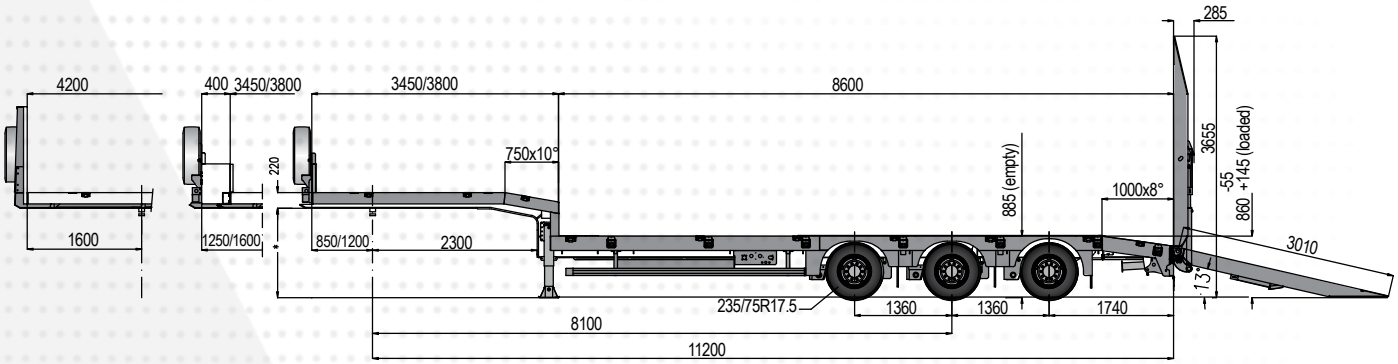


## MAX100-N-3A-9.30-U

L = 9300 mm A3 = 6100 mm
A1 = 4500 mm GL = 11900 mm

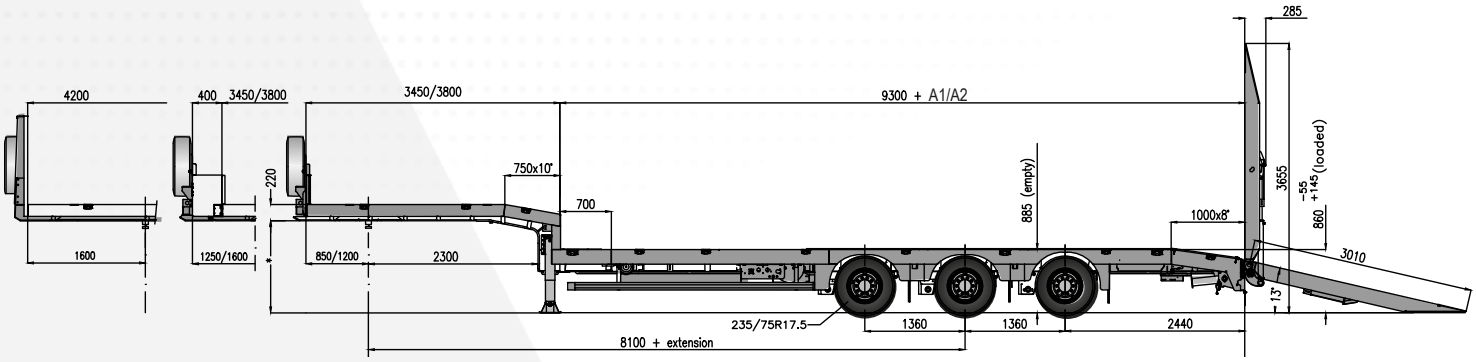


## MAX100-N-3B-8.60-U

L = 8600 mm GL = 11200 mm

## MAX100-N-3B-9.30-U

L = 9300 mm GL = 11900 mm

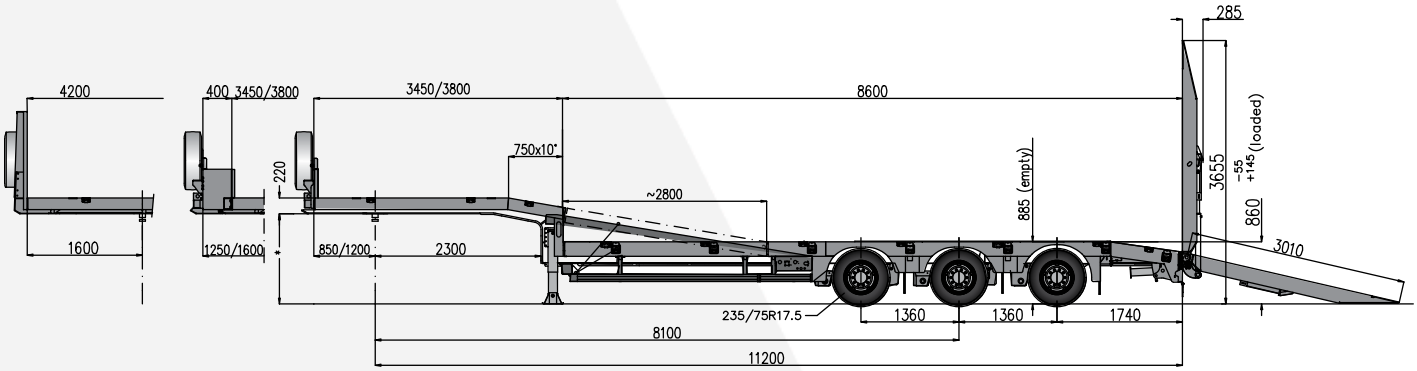

## MAX100-N-3BA-9.30-U

L = 9300 mm GL = 11900 mm
A = 3700 mm

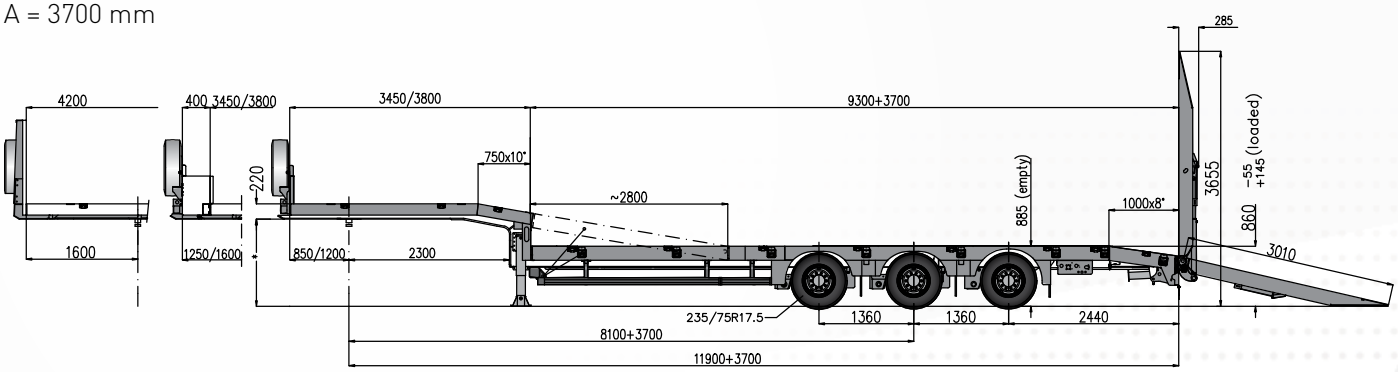


## MAX100-N-3A-9.30RM-U

L = 9300 mm GL = 11900 mm
A = 4750 mm

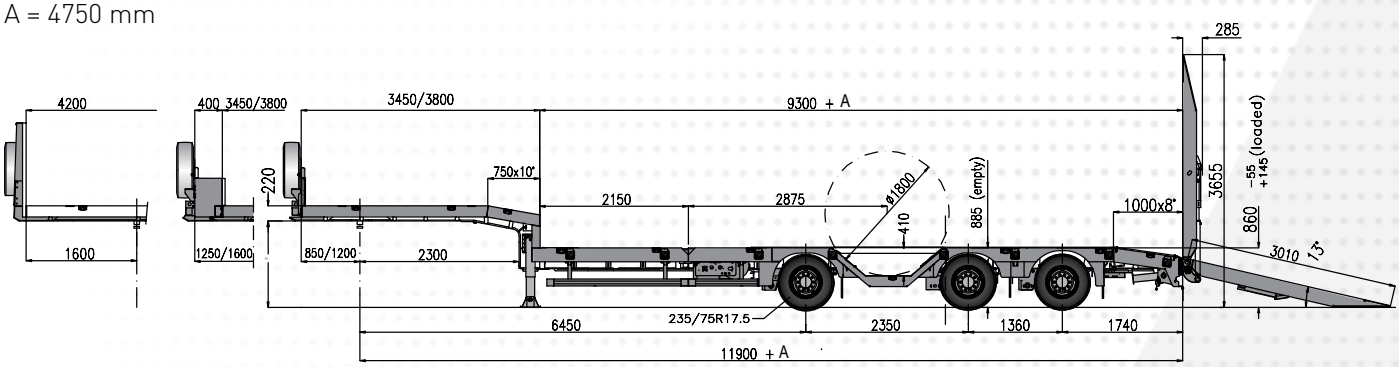


## MAX100-N-3A-9.30-NO-U

L = 9300 mm A2 = 6100 mm
A1 = 4500 mm GL = 11900 mm

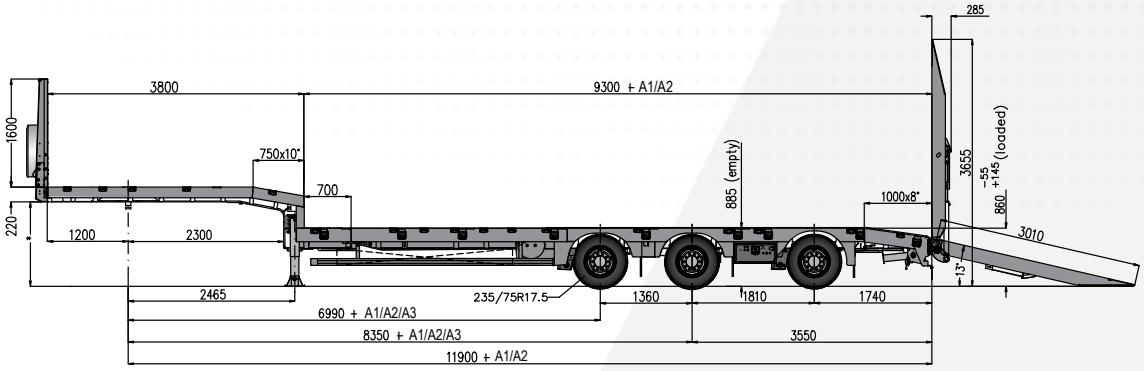


## MAX100-N-3A-9.25(NO)

L = 9250 mm GL = 11950 mm
A = 6100 mm

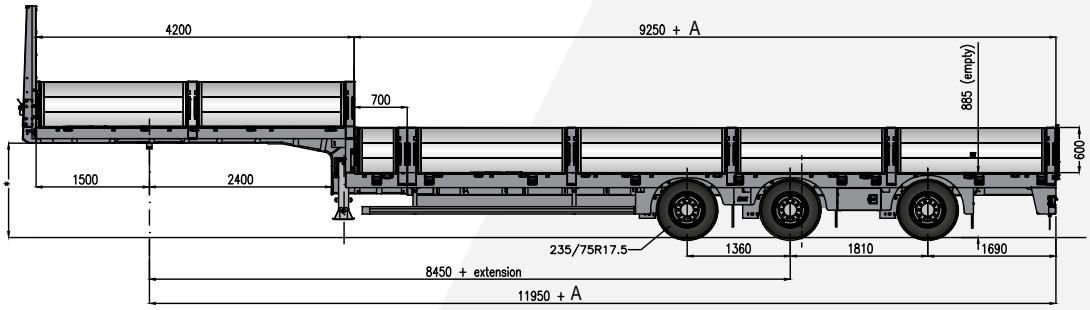

## MAX100-N-4-8.60-U

L = 8600 mm
A1 = 4500 mm
A2 = 5400 mm
GL = 11200 mm

## MAX100-N-4-9.30-U

L = 9300 mm
A1 = 4500 mm
A3 = 6100 mm
GL = 11900 mm

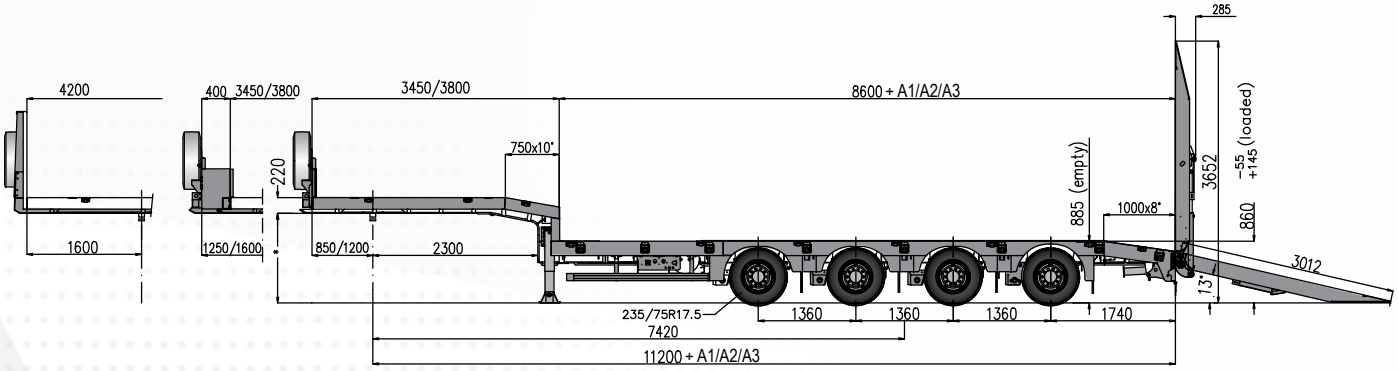


## MAX100-N-4A-8.60-U

L = 8600 mm
A1 = 4500 mm
A2 = 5400 mm
GL = 11200 mm

## MAX100-N-4A-9.30-U

L = 9300 mm
A1 = 4500 mm
A3 = 6100 mm
GL = 11900 mm

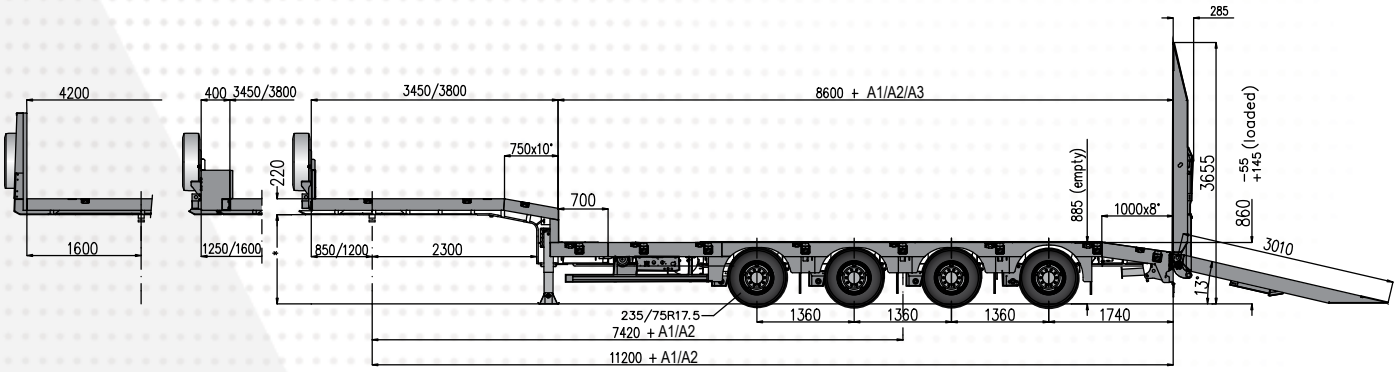


## MAX100-N-4AX-9.30-U

L = 9300 mm
A1 = 4500 mm
A3 = 6100 mm
GL = 11900 mm

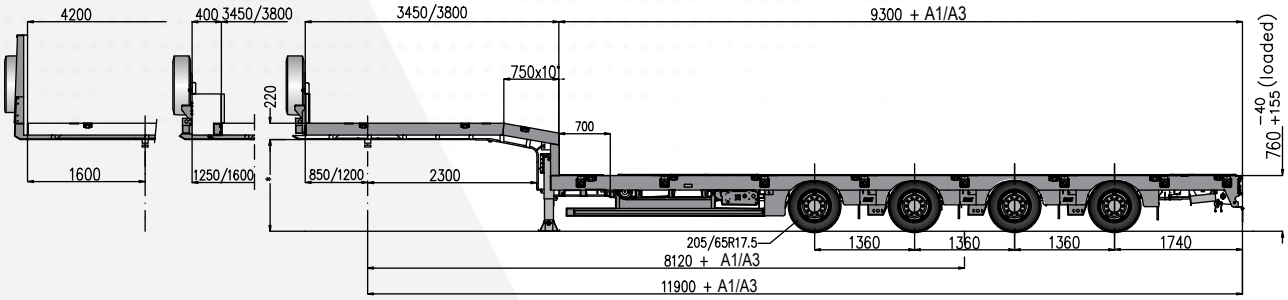


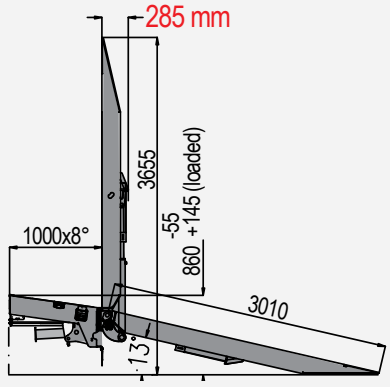


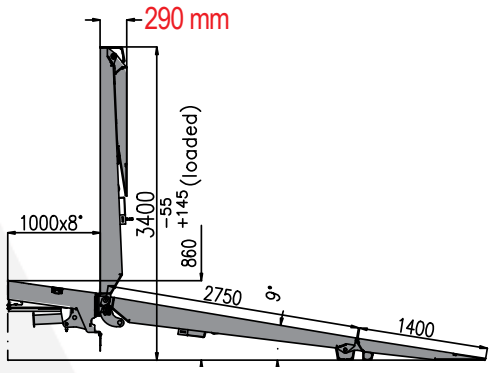

## MAX100-N-5A-8.60-U

L = 8600 mm
A1 = 4700 mm
A2 = 5900 mm
GL = 11200 mm

## MAX100-N-5A-9.30-U

L = 9300 mm
A1 = 4500 mm
A3 = 6600 mm
GL = 11900 mm

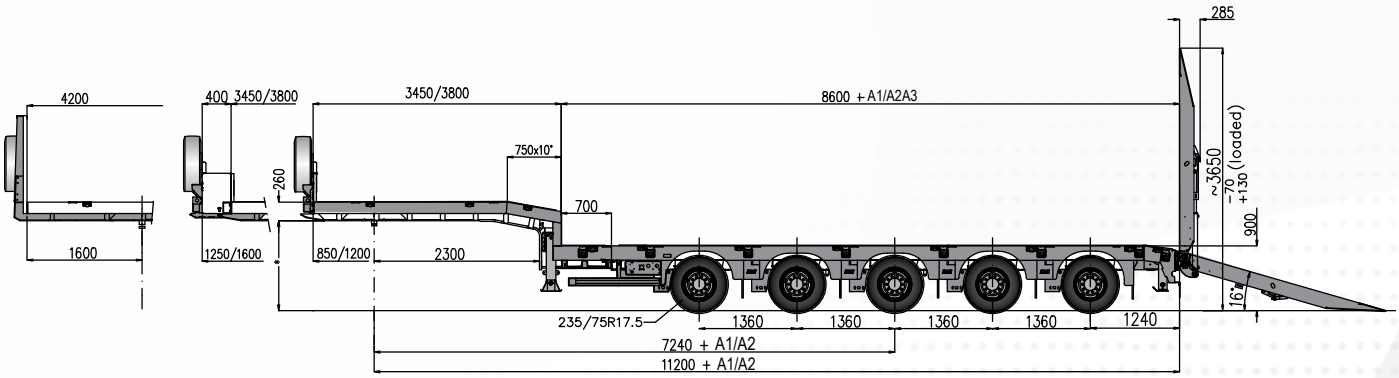


## MAX100-N-6A-9.30

L = 9300 mm
A1 = 4500 mm
A3 = 6100 mm
GL = 11900 mm

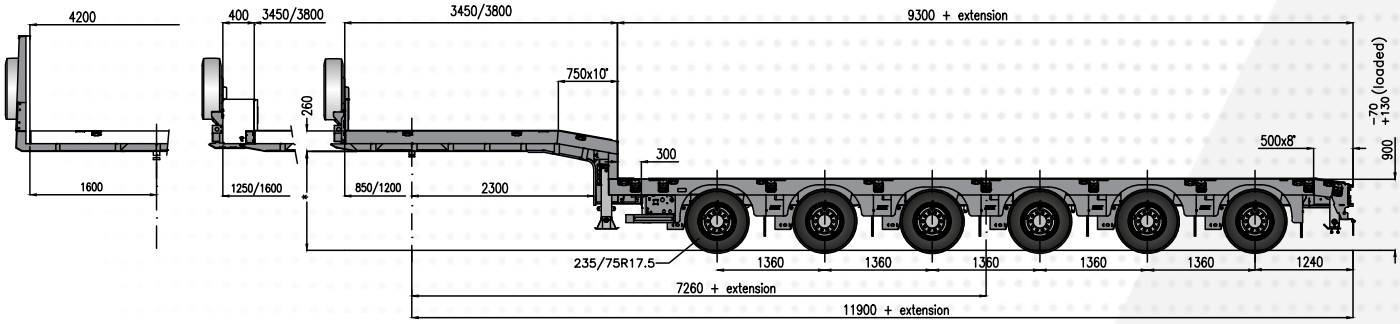


## MAX100-N-6AX-9.30

L = 9300 mm
A1 = 4500 mm
A3 = 6100 mm
GL = 11900 mm

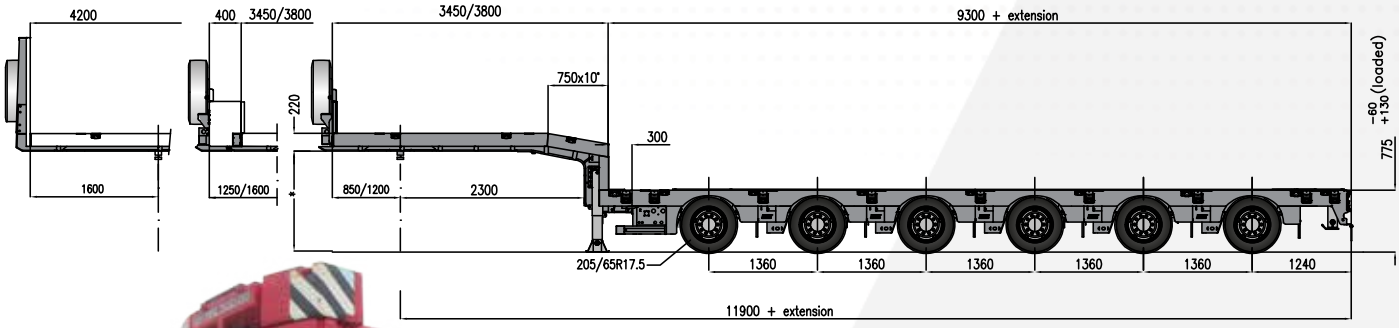

## MAX110-Z-2A-8.60-U

L = 8600 mm GL = 11200 mm

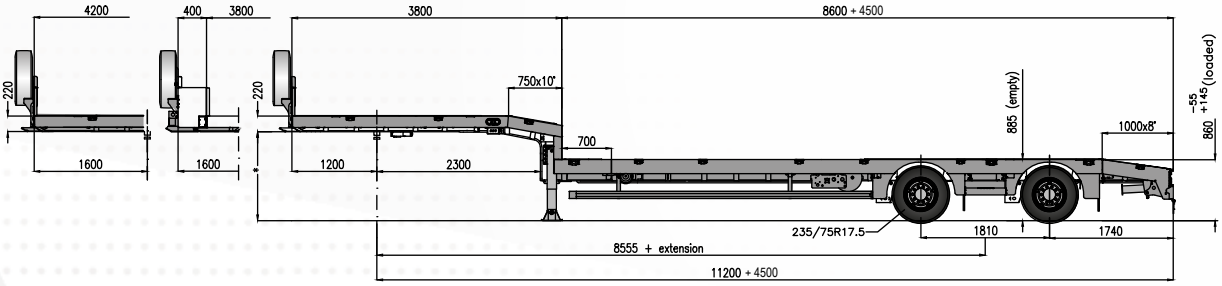


## MAX110-Z-3-8.60-U

L = 8600 mm GL = 11200 mm

## MAX110-Z-3-9.30-U

L = 9300 mm GL = 11900 mm

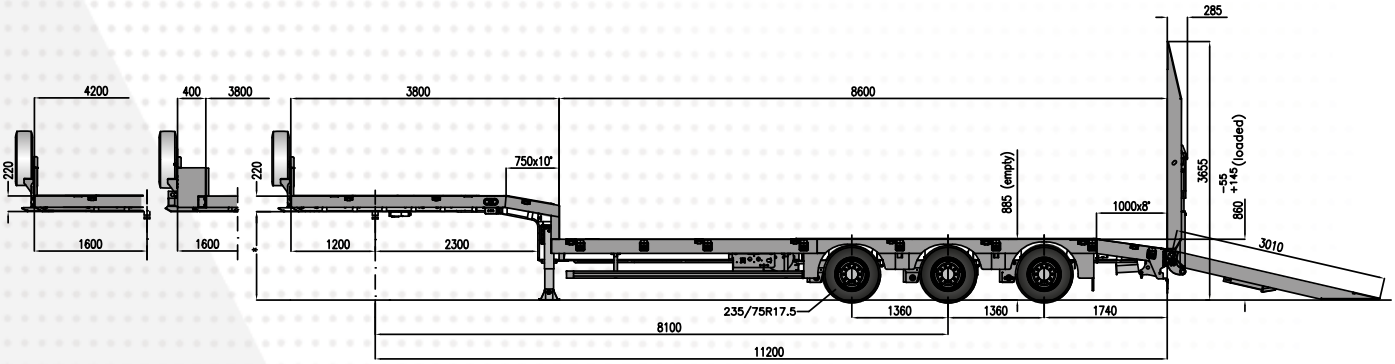

## MAX110-Z-3A-8.60-U

A1 = 4500 mm A2 = 5800 mm

## MAX110-Z-3A-9.30-U

A1 = 4500 mm A2 = 6500 mm

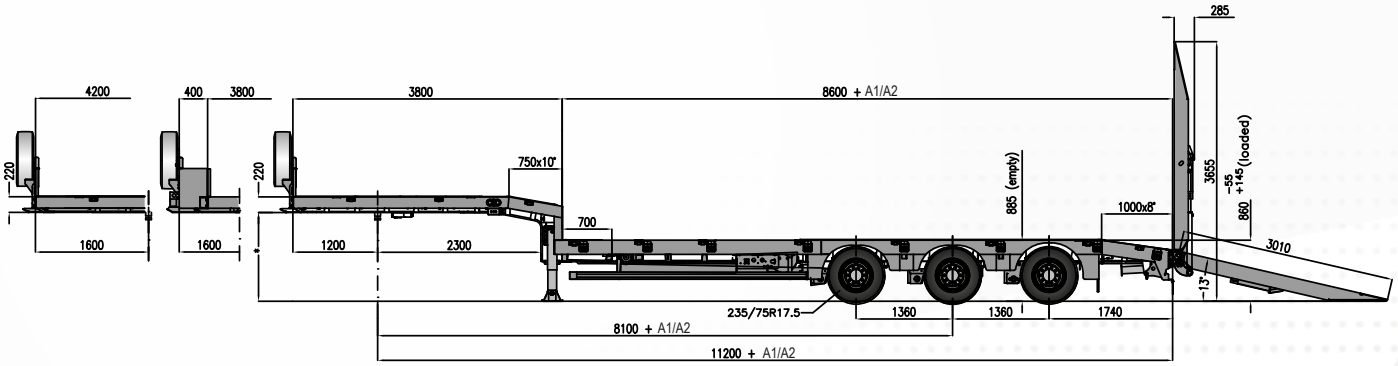


## MAX110-Z-3B-9.30

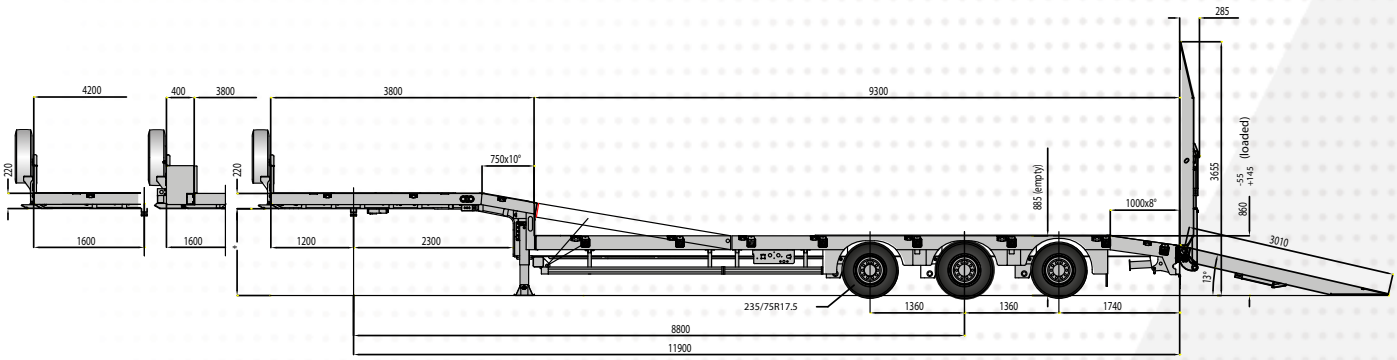


## MAX110-Z-4A-8.60

A1 = 4500 mm A2 = 5800 mm

## MAX110-Z-4A-9.30

A1 = 4500 mm A2 = 6500 mm

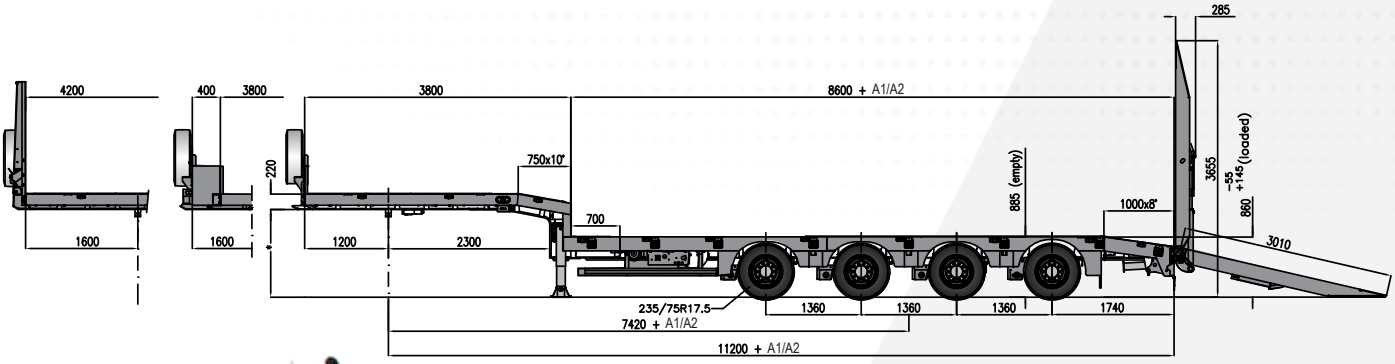

## Options

ALTEC
IVECO