CATERPILLAR 2ET4000

MONTACARGAS

MAX CAPACIDAD
1.5 TONS
ELEVACIÓN
3.0M

EL MONTACARGAS CATERPILLAR 2ET4000 CUENTA CON CARACTERÍSTICAS COMO SU PERFIL BAJO DE 2.04 METROS, ELÉCTRICO Y NEUMÁTICOS DE AIRE. ES IDEAL PARA MANIOBRAR CARGAS EN ESPACIOS REDUCIDOS, EN EL INTERIOR DE UN TRANSPORTE Y ESTIBA MÚLTIPLE DE UNA MANERA RÁPIDA, SEGURA Y EFICIENTE, A UN BAJO COSTO.

DIMENSIONES

ALTO	ANCHO	LARGO
2.04M	1.12M	3.15M

ELÉCTRICO

MANIOBRAS QUE HA REALIZADO:

- Trabajos en Interiores y Espacios Reducidos
- Carga y Descarga de Maquinaria
- Mantenimiento e Instalaciones Industriales
- Movimiento de Materiales de Construcción
- Movimiento de Plantas y Generadores Eléctricos
- Movimiento de Tanques
- Movimiento de Carga en General

Grúas & Equipos García

CATERPILLAR 2ET4000

MONTACARGAS

DIMENSIONES

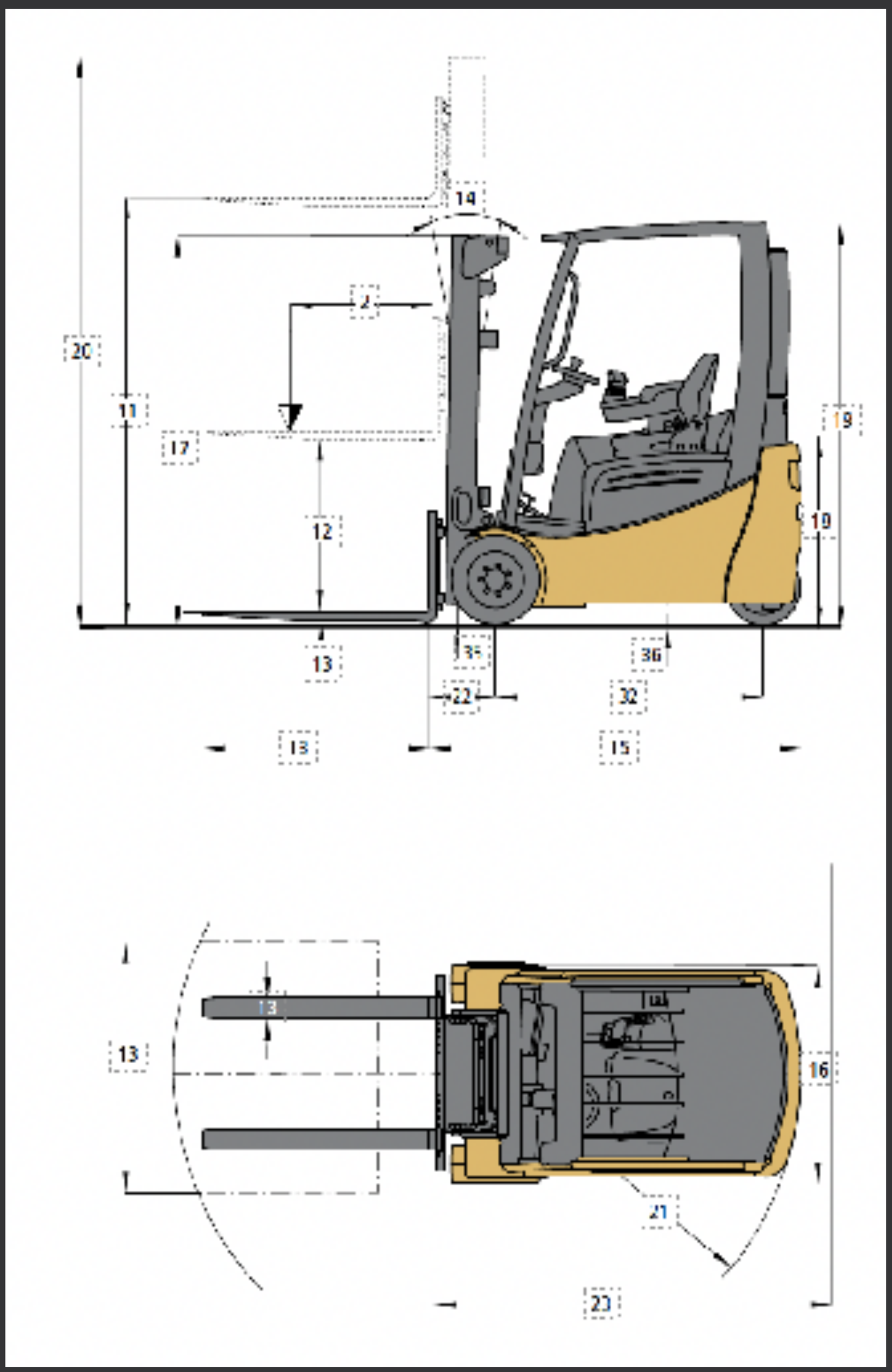

Grúas & Equipos García

CATERPILLAR 2ET4000

MONTACARGAS

	Characteristics			2ET4000	
1	Capacity at rated load center	lb	kg	3,880	2,000
2	Load center – distance	in	mm	24	500
3	Power – diesel, gasoline, LP gas, electric			electric	
4	Tire type – cushion, solid pneumatic			solid pneumatic	
5	Wheels – number front / rear (x = driven)			2x/2	
	Dimensions			**2ET4000**	
11	Maximum fork height*	in	mm	118	3,000
12	Free fork height*	in	mm	5.9	150
13	Fork dimensions – thickness x length x width	in	mm	1.6 x 3.9 x 45.3	40 x 100 x 1,150
	Fork spacing – out-to-out minimum / maximum	in	mm	12.3/36	312/914
14	Tilt – forward / backward	deg		7/	
15	Length to fork face	in	mm	78.5	1,995
16	Standard width	in	mm	44.1	1,120
	Width with wide stance drive wheels	in	mm	n/a	
17	Height with lowered mast	in	mm	79	2,000
18	Seat height to SIP	in	mm	36.2	920
19	Height to top of overhead guard	in	mm	80.4	2,040
20	Height with extended mast	in	mm	166	3,587
21	Minimum outside turning radius	in	mm	65.2	1,655
22	Load moment constant (36V)	in	mm	14.3	364
	Load moment constant (48V)	in	mm	13.4 [1]	340
23	Minimum aisle - 90° stack – must add load length and clearance	in	mm	78.6 [1]	2,000
	Performance			**2ET4000**	
24	Travel speed – loaded / empty (36V)	mph	km/h	8.7 / 9.9	14 / 16
	Travel speed – loaded / empty (48V)	mph	km/h	9.9 / 9.9	16 / 16
25	Lift speed – loaded / empty (36V)	fpm	m/s	65.0 / 108.3	0.33 / 0.55
	Lift speed – loaded / empty (48V)	fpm	m/s	88.6 / 124.0	0.45 / 0.63
26	Lowering speed – loaded / empty (36V)	fpm	m/s	108.3 / 108.3	0.55 / 0.55
	Lowering speed – loaded / empty (48V)	fpm	m/s	108.3 / 108.3	0.55 / 0.55
28	Maximum gradeability – loaded / empty (36V)	%		18 / 20	
	Maximum gradeability – loaded / empty (48V)	%		24 / 30	
	Weight			**2ET4000**	
29	Empty with minimum weight battery (36V)	lb	kg	7,421	3,366
	Empty with minimum weight battery (48V)	lb	kg	7,421	3,366
30	Axle load with rated load – front / rear (36V)	lb	kg	10,547 / 1,283	4,784 / 582
	Axle load with rated load – front / rear (48V)	lb	kg	10,547 / 1,283	4,784 / 582
	Axle load without load – front / rear (36V)	lb	kg	3,338 / 4,083	1,514 / 1,852
	Axle load without load – front / rear (48V)	lb	kg	3,338 / 4,083	1,514 / 1,852
	Chassis			**2ET4000**	
31	Tire size – front, standard solid pneumatic tires	in		200 / 50 - 10	
	Tire size – rear solid pneumatic tires	in		140 / 55 - 9	
32	Wheelbase	in	mm	57.7	1,465
33	Tread width – front, standard solid pneumatic tires	in	mm	36	914
34	Tread width – rear solid pneumatic tires	in	mm	6.9	176
35	Ground clearance – at lowest point at mast	in	mm	3.1	80
36	Ground clearance – at center of wheelbase	in	mm	3.9	100
37	Service brakes	type		electric / mechanical	
38	Parking brakes	type		electromagnetic	
	Powertrain			**2ET4000**	
39	Battery – type			lead-acid	
40	Battery dimensions (length x width x height)	in		29.06 x 32.68 x 24.69	
41	Battery – maximum capacity at 6 hour discharge rate (36V)	Ah	kWh	680	24.5
	Battery – maximum capacity at 6 hour discharge rate (48V)	Ah	kWh	600	28.8
42	Battery weight, minimum (36V)	lb	kg	2,260	1,025
	Battery weight, minimum (48V)	lb	kg	2,147	974
43	Motors – traction output (60 min. rating) x 2 (36V)	HP	kW	6.8	5
	Motors – traction output (60 min. rating) x 2 (48V)	HP	kW	6.0	4.5
44	Motors – lift output (15% rating)	HP	kW	15.4	11.5
45	Drive controls	type		Impulse / AC	
46	Hydraulic controls	type		AC	
47	Relief pressure for attachments at auxiliary	psi	bar	3,336	230
48	Noise level – mean value at operator's ear	dB(A)		67	

Grúas & Equipos García

70 AÑOS
DE EXPERIENCIA.

Grúas & Equipos García

GRÚAS Y OPERADORES 100% CERTIFICADOS

GRÚAS Y OPERADORES 100% CERTIFICADOS

SINCE 1968 CEO GERMANY ©

CON GUSTO TE AYUDAMOS COTIZANDO LA GRÚA QUE MÁS SE ADAPTE A TU PROYECTO.

Contáctanos

333578-2928

Calle Coatlán 8590-B, Nueva España, 45530 Guadalajara, Jal.

fidel.delira@gruasyequiposgarcia.com

338526-2030

www.gruasyequiposgarcia.com